Tecnical Rider p. 2

Light Plan
00CLOWN

Tony Murchland
93 246 2358

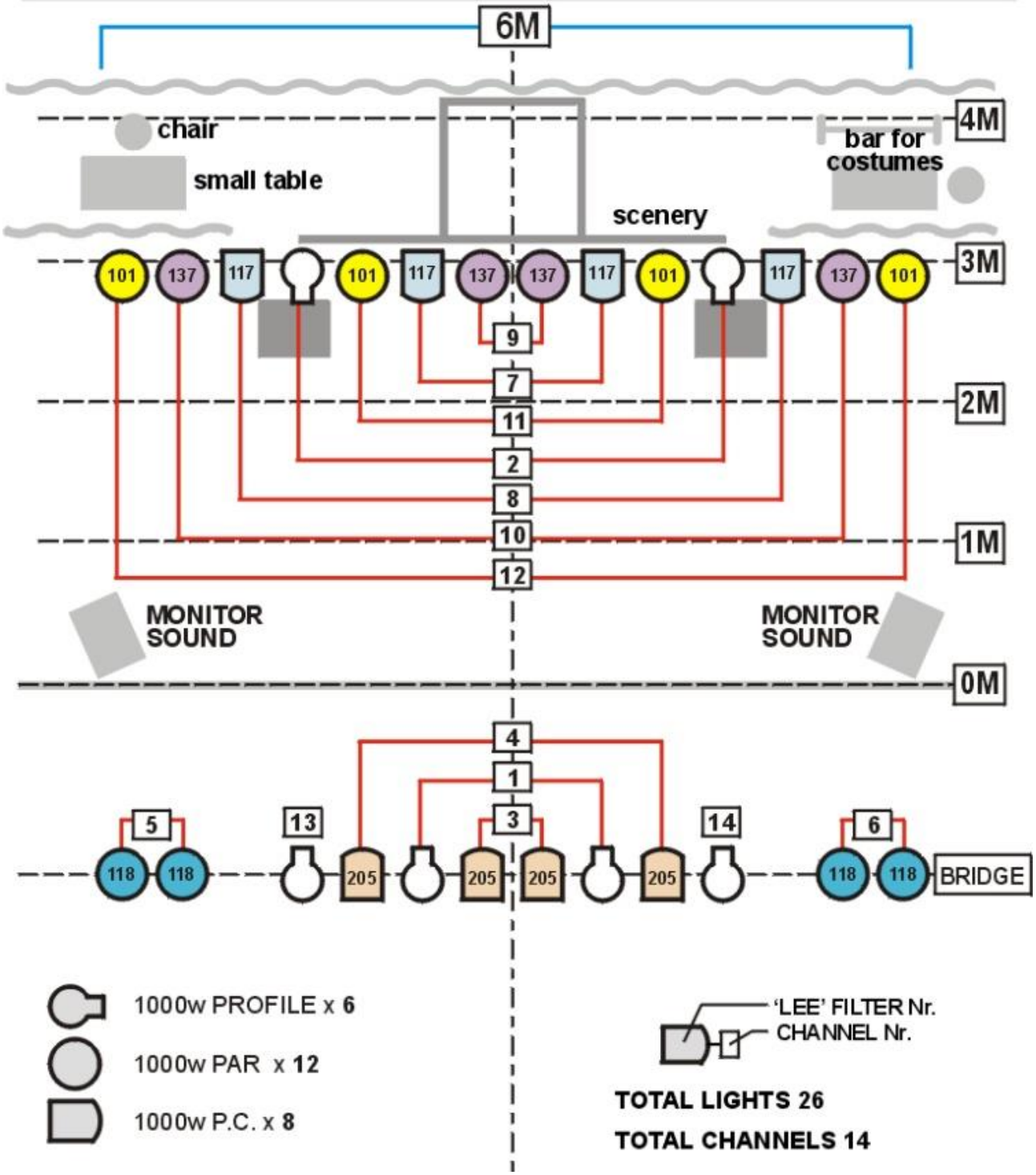

1000w PROFILE x **6**

1000w PAR x **12**

1000w P.C. x **8**

'LEE' FILTER Nr.
CHANNEL Nr.

TOTAL LIGHTS 26

TOTAL CHANNELS 14

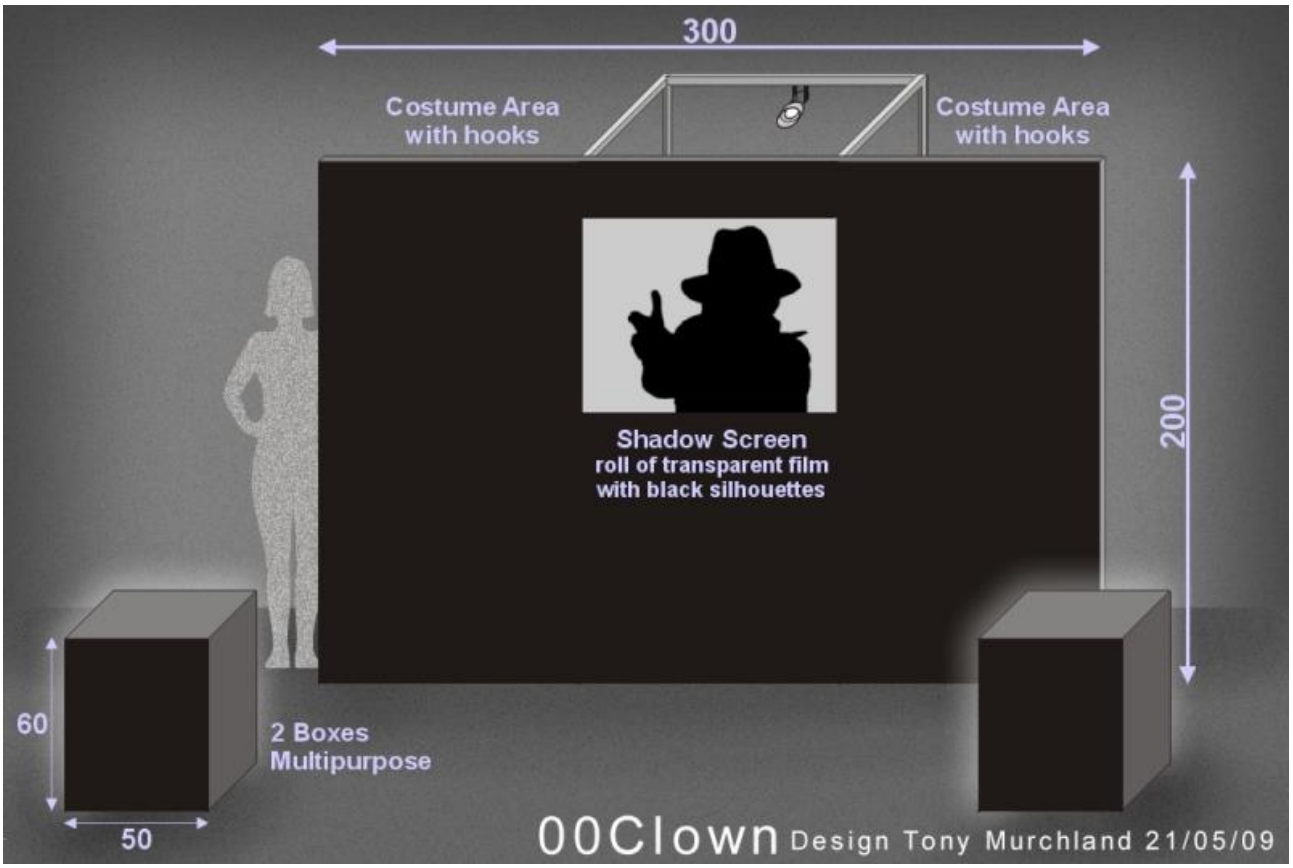
300
Costume Area
with hooks
Costume Area
with hooks
200
Shadow Screen
roll of transparent film
with black silhouettes
60
2 Boxes
Multipurpose
50
00Clown Design Tony Murchland 21/05/09